USER MANUAL

Cellar Metal Web Swing Set

Find the Digital Manual Online

WARNING: The disassembled product may contain small parts which pose a choking hazard to children under 3.

IMPORTANT:
This product may contain sharp points and small parts prior to assembly. The owner's manual contains safety, assembly, use and maintenance instructions. This product must be assembled by an adult who has read and understood these instructions. Keep the packaging away from children and dispose of all packaging before use.

For the installer and your children's safety, it is important to fully read and understand the instructions and safety hazards before commencing the assembly of the product.

NOTE:
This manual should not be used to guide your purchasing decision. Your product, and the contents inside its carton, may vary from what is listed in this manual. This manual may also be subject to updates or changes. Updated manuals are available through our website at ***www.lifespankids.com.au.***

TABLE OF CONTENTS

I. GENERAL SAFETY INSTRUCTIONS 3

1.1 Danger for Children 3

1.2 Risk of Injuries 3

1.3 Product Damage 3

1.4 Assembly Advice 4

II. SAFETY INSTRUCTIONS 5

III. ASSEMBLY INSTRUCTIONS 7

IV. MAINTENANCE 14

V. CLEANING 15

VI. WARRANTY 15

I. GENERAL SAFETY INSTRUCTIONS

This product is intended for outdoor, domestic use only. It is not suitable for commercial or medical use.

Weight Limit: 50kg per apparatus
Maximum Fall Height: 1.83m

1.1 DANGER FOR CHILDREN

WARNING: No eating while using the product.

- Children do not recognize potential dangers from this product. The product must be stored out of reach of children and pets.
- This product may only be used with adult supervision at all times.
- The packaging material is not suitable for children due to choking and suffocation hazards.

1.2 RISK OF INJURIES

- Do not use the product if it is damaged or defective. If it is damaged or defective, please contact a qualified technician.
- Check the product before each use. Defective parts must be changed immediately as they can impair the function and the safety of the product.
- For safety, only one person should use the trampoline, slide, swing, or any other moving equipment at a time, unless the product specifically provides for use by more than one person. Failure to follow this guideline can result in serious injury. Always follow the manufacturer's instructions and safety recommendations for maximum users.
- Use the product only on even and non- slipping surfaces. Never use it near water and keep sufficient space around for safety.
- Beware of moving parts such as the springs or elastics, which your arms and legs can get caught in. Do not place any objects or body parts in the product's openings.

1.3 PRODUCT DAMAGE

- Do not make alterations to the product. Only use original spare parts. Qualified technicians should only carry out repairs – improper repairs can lead to danger for the user. Use this product only as described in this manual.
- Protect the product against high moisture, humidity, high temperature and direct sunlight.

1.4 ASSEMBLY ADVICE

- The assembly of the product must be done carefully and by an able-bodied adult. If in any doubt, ask a technically qualified person.
- Before you start with the assembly, read the instructions carefully.
- Remove all packaging materials and lay down all parts on an open space. This gives you an overview and simplifies the assembly procedure.
- Check with the parts list that all parts are available. Dispose of the packaging material when the assembly is completed.
- Beware that when using tools or doing technical work, there is always a risk of injuries. Assemble the product with care.
- Create a danger free environment; for example, do not let tools lay around the workspace. Store the packaging material in a way that cannot cause any danger.
- After installing the product according to the instruction manual, ensure all screws, bolts and nuts are correctly installed and tightened and that all joints are secure.
- Reasonable space must be kept between the product and possible sources of danger, such as other equipment swimming pools and fences.
- The product must be assembled correctly before use.
- Your play structure must be installed on a flat horizontal surface with a minimum of 2m between it and any structure or obstacle such as a fence, garage house, tree branches, clothesline, or electric cables.
- Modifications made to the original product shall be carried out according to the instructions of the manufacturer.
- The product must always be used in a well-lit area.
- Do not place anything under the product.
- Use gloves during assembly and disassembly.
- Outdoor products should be equipped with a device that in strong wind conditions avoid displacement due to wind (e.g. steel bars in the ground or loads like sandbag or water bags).
- In certain areas during winter, snow buildup and the low temperatures can damage the product. It is recommended to remove snow buildup and store the product indoors.
- We strongly recommend visual inspections every 3 months to ensure the integrity of the entire product. Replace any parts as necessary.

II. SAFETY INSTRUCTIONS

- The safety instructions of the product should always be considered and obeyed.

- Using the product may result in permanent injury such as paralysis, or even death. Falling off the product may lead to injuries, particularly to the back, neck or head.

- No clothes with hooks or lose parts should be worn or carried during product usage in order to avoid hooks getting caught and causing injury.

- Strong winds can result in the product being blown away or damaged. If strong winds are predicted the product must be disassembled and moved to a sheltered area or sufficiently anchored down.

- Moving the product whilst assembled may affect the integrity of the frame. Should it be necessary to move the product, please consider the following:

    1. Force to be evenly spaced around the frame to lift the product off the ground.
    2. The product must be carried horizontally.
    3. Use caution whilst moving as it could bend the product frame.

- Users should be familiar with the assembly manual. This manual contains assembly guidance; selected precautionary measures as well as recommendations for servicing and maintenance of the product, in order to ensure a secured and fun use of the product.

- It is the responsibility of the owner or the supervisor to guarantee that all users of the product are informed sufficiently of all warning references and safety instructions.

For the supervisor

The supervisor's role is to make sure users are aware of all safety precautions and that these precautions are enforced. When a supervisor is not available, the product may be disassembled or covered to limit access.

- The product can be only used if it is in good condition, worn or damaged parts should be replaced.
- Objects, which could be dangerous to the user, should be away from the product.
- Avoid unauthorized and unsupervised use of the product.
- Do not use the product under influence of alcohol or drugs (incl. medicines).
- Do not use the product as a jumping platform for other articles.

Consumer Information Sheet for Playground Surfacing Materials

The US Consumer Product Safety Commission (CPSC) estimates that about 100 000 playground equipment-related injuries resulting from falls to the ground surface are treated annually in US hospital emergency rooms. Injuries involving this hazard pattern tend to be among the most serious of all playground injuries, and have the potential to be fatal, particularly when the injury is to the head. The surface under and around playground equipment can be a major factor in determining the injury-causing potential of a fall. It is self-evident that a fall onto a shock-absorbing surface is less likely to cause a serious injury than a fall onto a hard surface. Playground equipment should never be placed on hard surfaces, such as concrete or asphalt, and while grass may appear to be acceptable, it may quickly turn to hard-packed earth in areas of high traffic. Shredded bark mulch, wood chips, tine sand or gravel are considered to be acceptable shock absorbing surfaces when installed and maintained at a sufficient depth under and around playground equipment.

Table B.1 lists the maximum height from which a child would not be expected to sustain a life-threatening head injury in a fall on to four different loose-fill surfacing materials if they are Installed and maintained at depths of 150 mm, 225 mm and 300 mm.

TABLE B.1: Fall height in millimetres from which a life-threatening head injury would not be expected.

TYPE OF MATERIAL	DEPTH OF SURFACING MATERIAL		
	150mm	225mm	300mm
Double Shredded Bark Mulch	1800	3000	3300
Wood Chips	1800	2100	3600
Fine Sand	1500	1500	2700
Fine Gravel	1800	2100	3000

However, it should be recognised that all injuries due to falls cannot be prevented, no matter what surfacing material is used.

It is recommended that a shock absorbing material extend a minimum of 1800mm in all directions from the perimeter of stationary equipment such as climbing frames and slides. However, because children may deliberately jump from a moving swing, the shock absorbing material should extend in the front and rear of a swing with a minimum distance of twice the height of the pivot point measured from a point directly beneath the pivot on the supporting structure.

This information is intended to assist in comparing the relative shock-absorbing properties of various materials. No particular material is recommended over another. However, each material is only effective when properly maintained. Materials should be checked periodically and replenished to maintain correct depth as determined necessary for the equipment in question. The choice of a material depends on the type and height of the playground equipment, the availability of the material in a particular area, and its cost.

III. ASSEMBLY INSTRUCTIONS

PARTS LIST

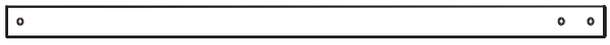

LK2901-Upper Leg x 4

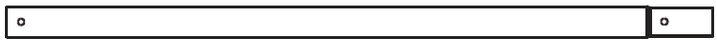

LK2902-Lower Leg x 4

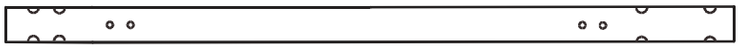

LK2903-Top Bar x 1

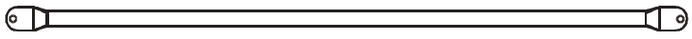

LS1004-Sidestay x 2

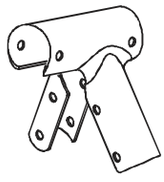

Bracket x 2

LK2904-01
Web Swing Rope Set x 2

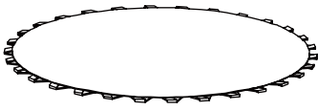

LK2904-02
Web Swing Mat x 1

Nut M8 x 4

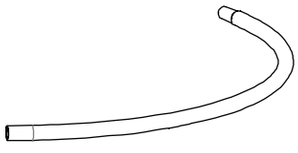

LK2904-03
Web Swing Frame x 4

Foam x 4

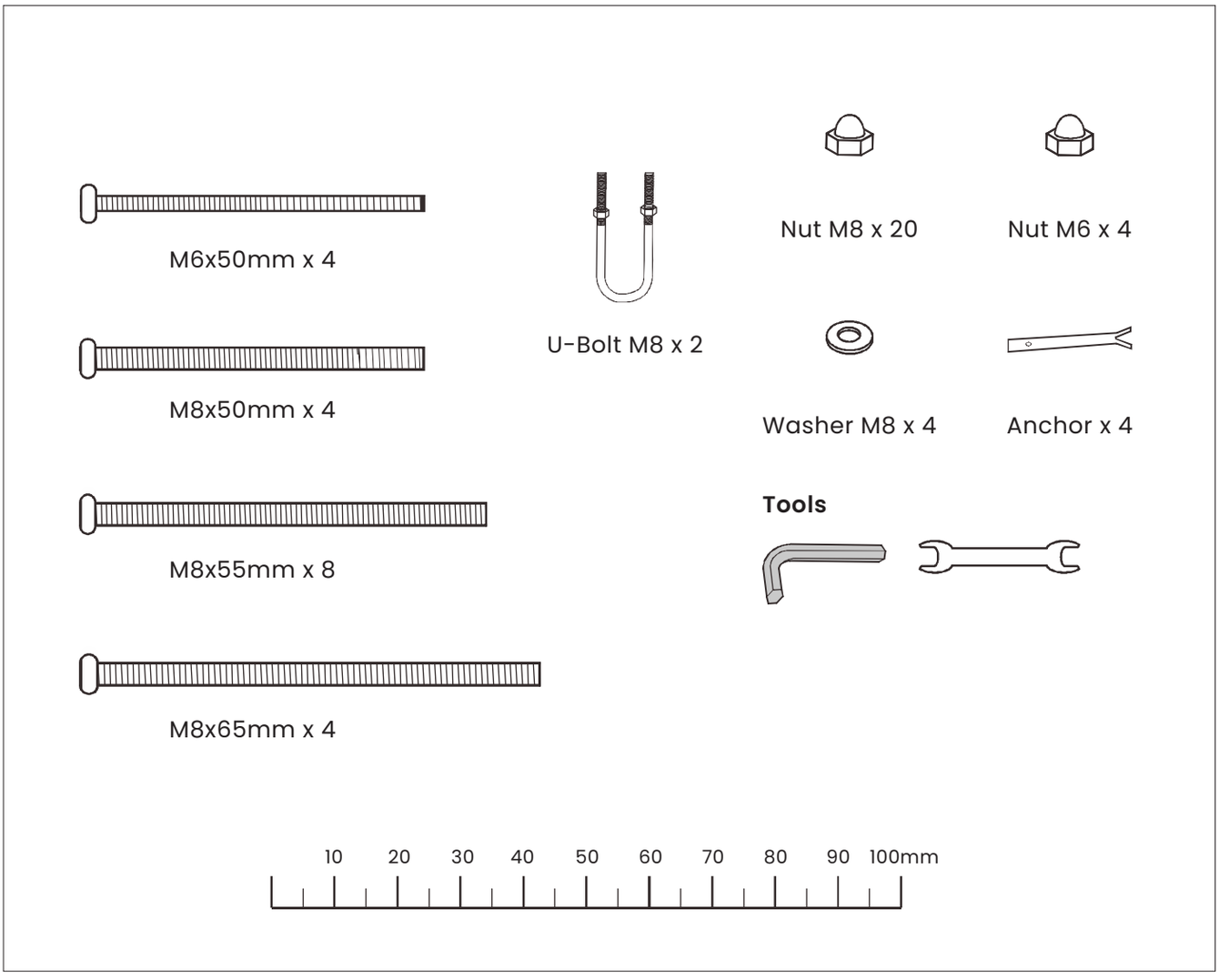
M6x50mm x 4
M8x50mm x 4
M8x55mm x 8
M8x65mm x 4
U-Bolt M8 x 2
Nut M8 x 20
Nut M6 x 4
Washer M8 x 4
Anchor x 4
Tools
10 20 30 40 50 60 70 80 90 100mm

SET UP

STEP 1: LK2903 - TOP BAR ASSEMBLY

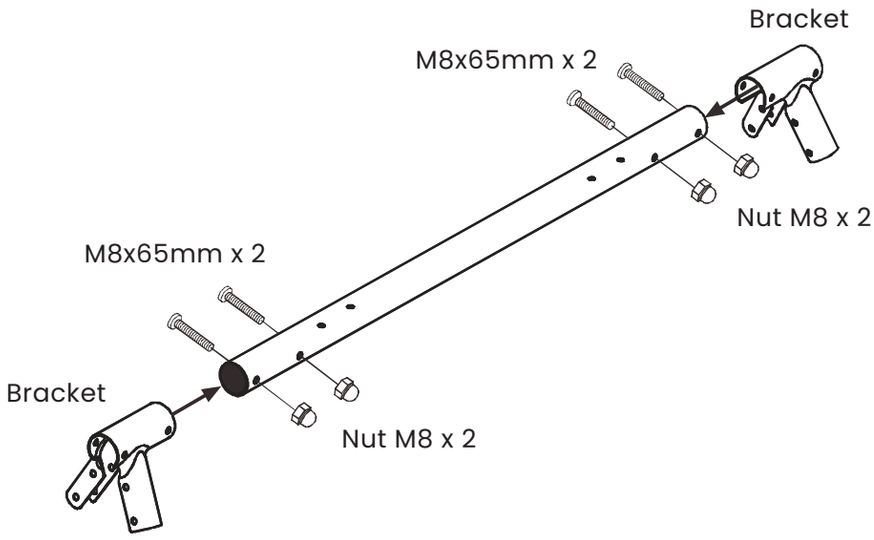

STEP 2: LK2901 - UPPER LEG ASSEMBLY

Do not fully tighten bolts
until frame is fully assembled.

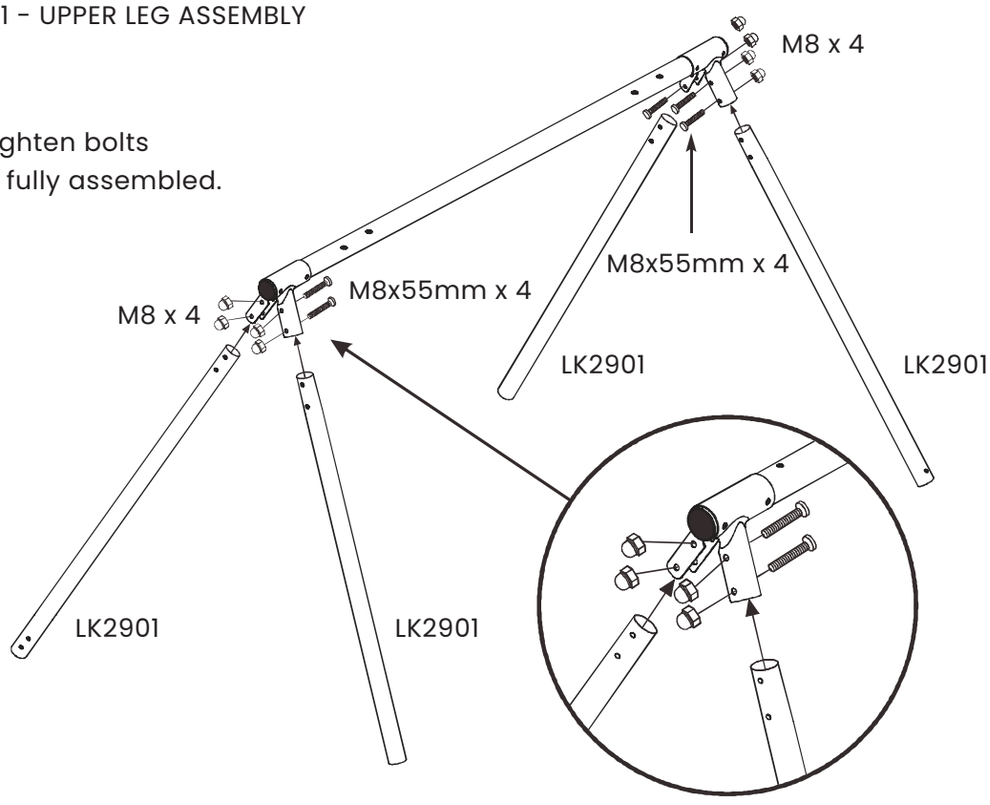

STEP 3: LK2902 - LOWER LEG ASSEMBLY

Check all bolts are securely
fastenedto ensure frame stability.

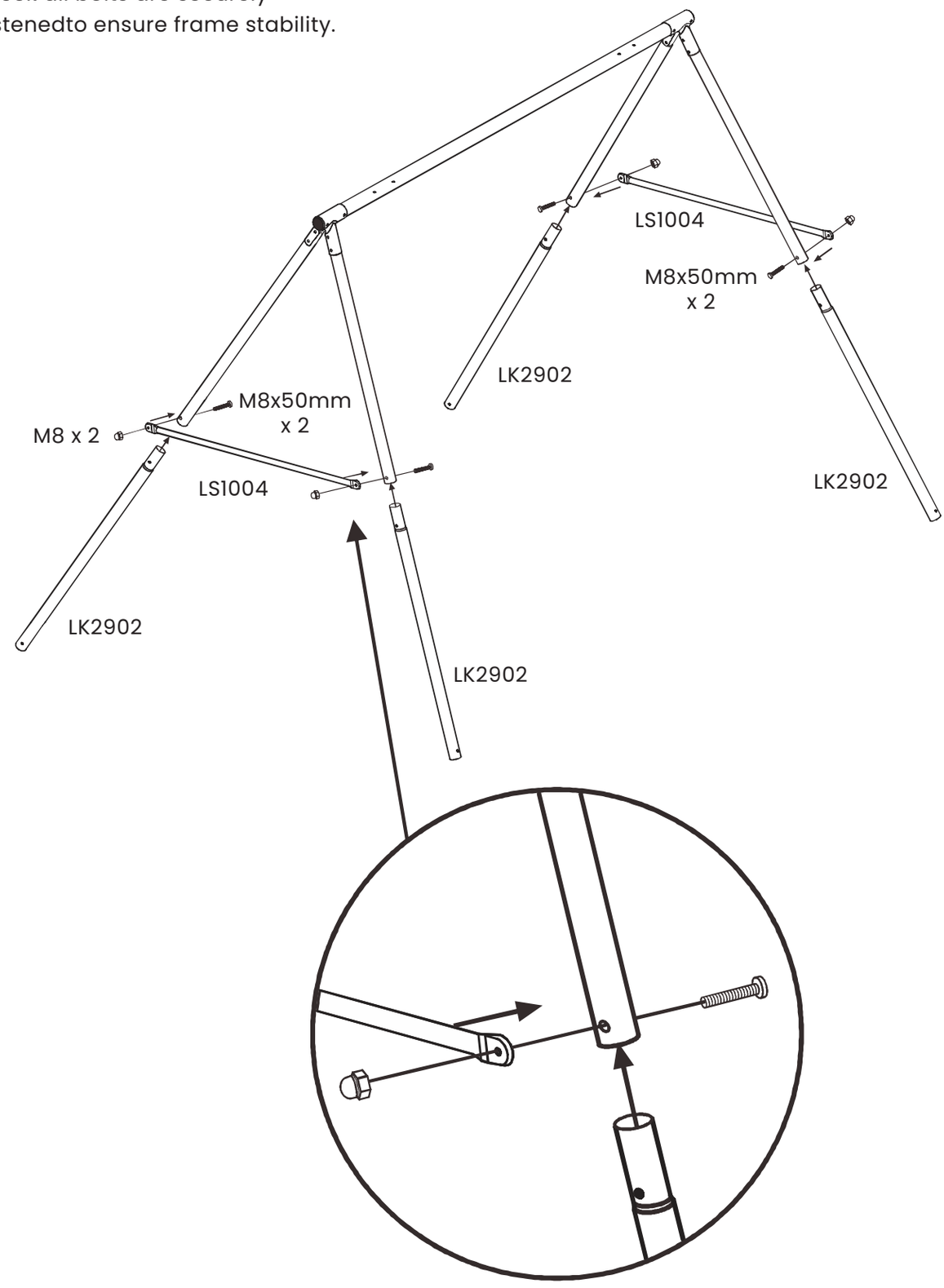

STEP 4: LK2904 - WEB SWING SET ASSEMBLY

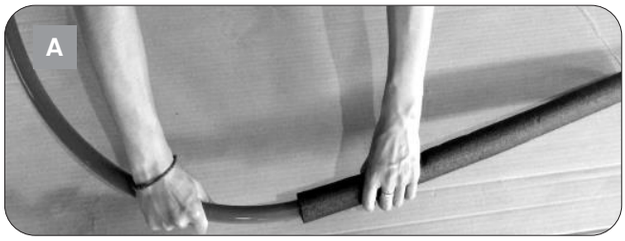

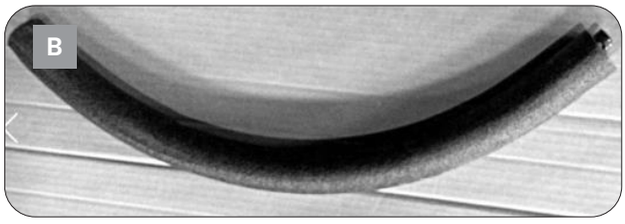

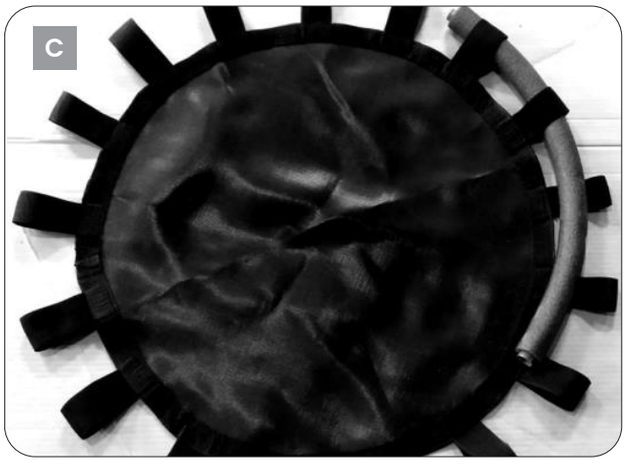

Nut M8 x 4

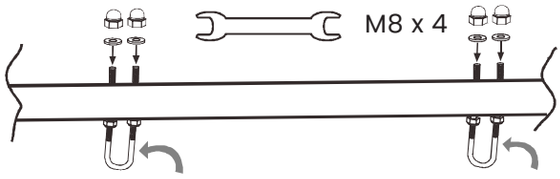

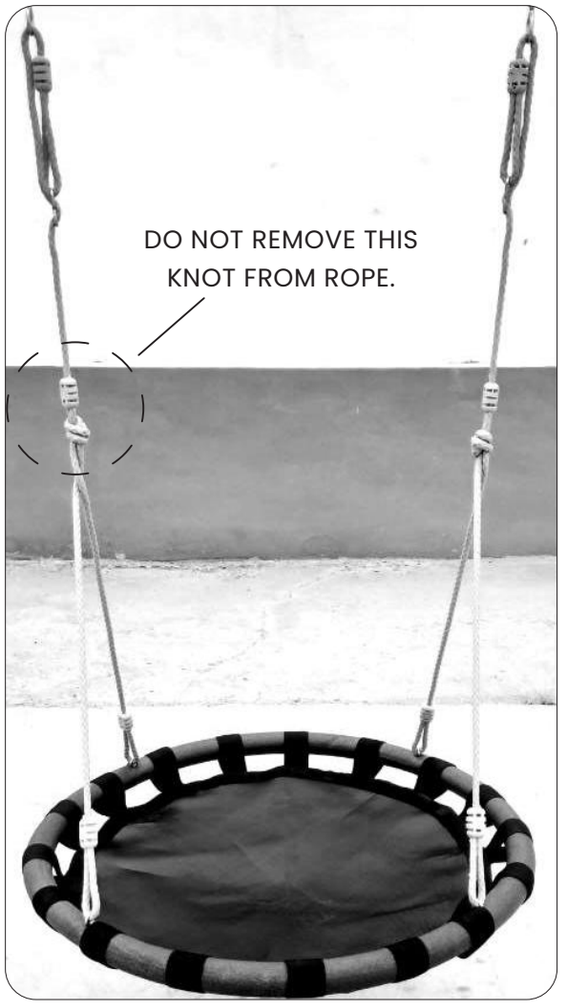

STEP 5: ANCHOR ASSEMBLY AND PLAYZONE

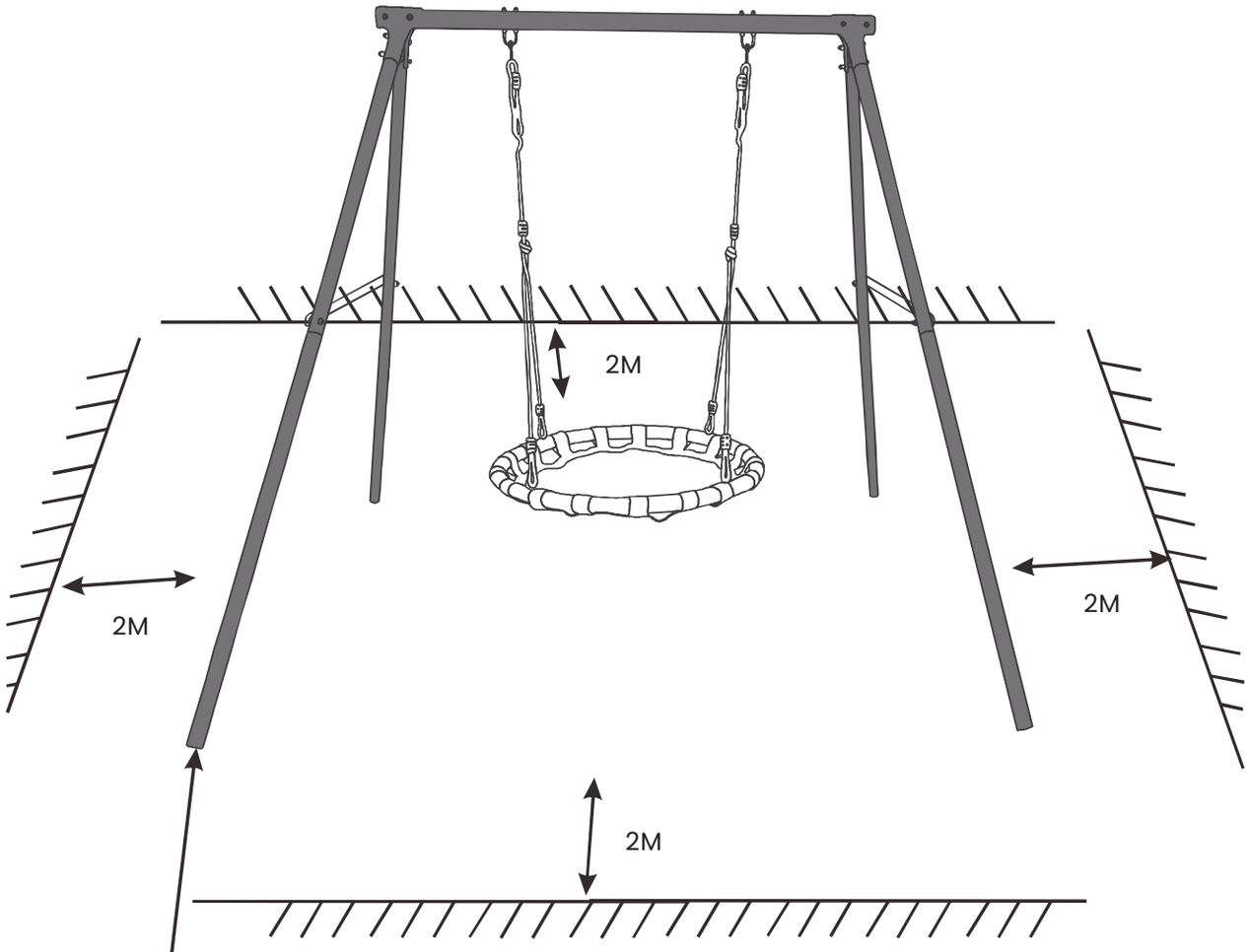

The swing set is provided with anchor kits that must be used to secure swing. If you wish to add additional stability you may concrete the anchors as shown in below diagram.

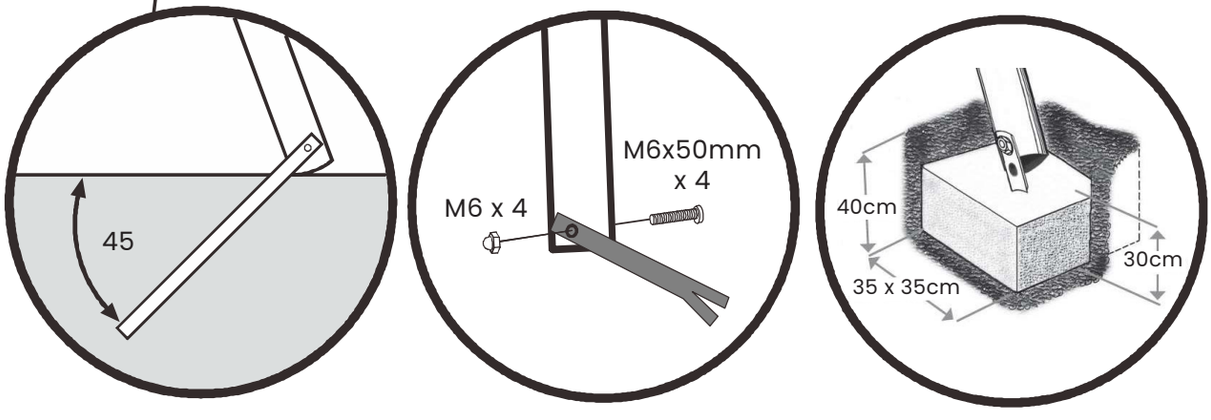

WARNING:

- This product is to be used domestically in an outdoor family environment.
- This equipment may not be used for collective and/or public purposes (playgrounds, camp grounds, schools, nursery schools, etc.)
- This item is designed for children ages 3 to 12 and must be used under adult supervision.

ASSEMBLY

- Assembly must be performed by two adults.

ANCHORING

- Anchoring is recommended for additional stability.
- Anchor kits are provided, cement is not supplied.
- Minimum 5cm depth below ground level of concrete anchoring is needed.
- The swing frame must not be installed directly on cement, asphalt, or any other hard surface.
- Your swing frame must be attached on a flat horizontal surface with a minimum of 2m between it and any structure or obstacle such as a fence, garage house, tree branches, cloths lines, or electric cables.

IV. MAINTENANCE

WARNING: Please keep for future reference.

We recommend regular maintenance to be conducted at the beginning of each season as well as at regular intervals during the usage season for your play equipment to ensure all main parts/fixings are tightly secured, well-oiled and intact to avoid failure, injury or hazards.

GENERAL ADVICE

It is of particular importance that this is followed at the beginning of each season as well as at regular intervals during the usage season.

- Check the accessories monthly as well as the play equipment's structure to prevent falling risks.
- Check and retighten screws, bolts, and all other hardware elements as necessary.

    a. Do not over tighten to avoid damaging the thread or cracking the surrounding wood.

- Check all coverings and bolts for sharp edges and replace when required.
- Lubricate all moving metallic parts.
- When signs of oxidation and / or rust appear on various metallic parts of your equipment, sand rusted areas and tubular members and repaint using a non-lead-based paint when required.
- Where applicable: check swing seats, chains, ropes, and other means of attachment for evidence of deterioration.
- Replace when required in accordance with the owner's manual.

If your play structure is disassembled, be sure to clearly mark any attached metal plates to prevent accidents. Check all bolt covers and sharp edges and replace them if necessary.

For longer accessory life, we suggest storing them indoors during winter.

USING THE EQUIPMENT

- Each swing is limited to 50kg max weight and must be used by one child at a time.
- For swing frames equipped with a slide, avoid direct sun exposure in order to prevent risks of burns and ensure that the landing area is clear. To slide down the slide, children must be sitting with their feet forward.
- During assembly and use, ensure that any splinters are removed.

V. CLEANING

Do not use any abrasive cleansers for the cleaning. Use a soft, damp cloth to eliminate dirt and dust.

VI. WARRANTY

AUSTRALIAN CONSUMER LAW

Many of our products come with a guarantee or warranty from the manufacturer. In addition, they come with guarantees that cannot be excluded under the Australian Consumer Law. You are entitled to a replacement or refund for a major failure and compensation for any other reasonably foreseeable loss or damage.

You are entitled to have the goods repaired or replaced if the goods fail to be of acceptable quality and the failure does not amount to a major failure. Full details of your consumer rights may be found at **www.consumerlaw.gov.au**.

Please visit our website to view our full warranty terms and conditions:
www.lifespankids.com.au/Warranty-Policy-Kids

WARRANTY AND SUPPORT

Any claim against this warranty must be made through your original place of purchase. Proof of purchase is required before a warranty claim may be processed. If you have purchased this product from the Official Lifespan Kids website, please visit **www.lifespankids.com.au/warranty-form**

For support outside of warranty, if you wish to purchase replacement parts or request a repair or service, please visit **www.lifespankids.com.au/warranty-form** and fill in our Repair/Service Request Form or Parts Purchase Form.

LIFESPAN KIDS

www.lifespankids.com.au